PRODUCT DETAILS

Dimensions	300x300x95 mm
Weight	5 Kg
Material	Ceramic
Colors	
Standard	Can be installed to adhere to PMR standards**

CHARACTERISTICS

Wall-hung or countertop hand washbasin	
Without overflow	
Hand faucet/tap hole	Ø35mm on the right
Waste fitting thread	G 1"1/4
Bonde céramique à écoulement libre	

MAINTENANCE

pH-neutral products: **+ Non-abrasive sponge**	Glass cleaner, Black soap, Household alcohol
Not to be use:	Hydrochloric acid, Ammonia, White vinegar, Bleach, Household acids

KIT CONTENT

- **Ceramic hand washbasin**
- **Wall fixture kit**
- **Ceramic pop-up plug included (with fixture option for free-flowing drainage)**

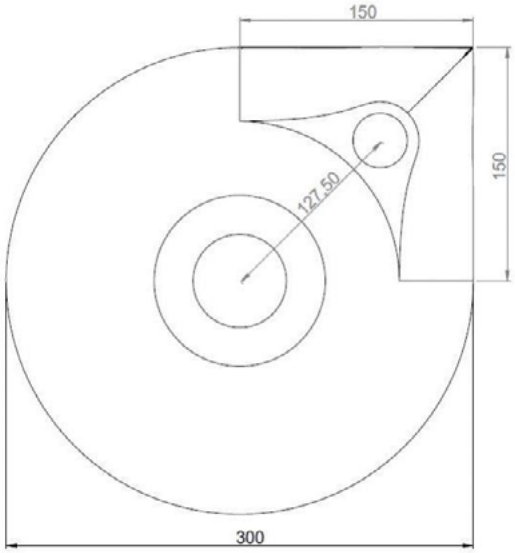

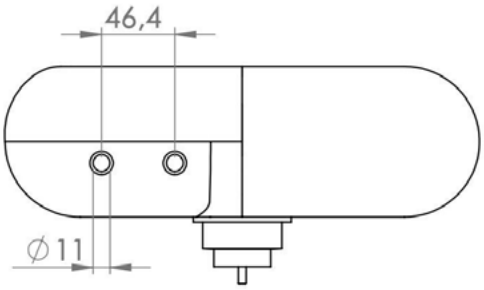

**
- *The hand basin must be equipped with an ultra-flat, space-saving, or offset siphon.*
- *The total thickness of the Orbe hand basin + siphon must not exceed 15 cm (the hand basin is 9.5 cm high, so the siphon cannot exceed 5.5 cm).*
- *The Orbe hand basin + siphon assembly must be installed at a height between 70 cm (bottom surface of the siphon) and 85 cm (top surface of the hand basin).*

**Our plans indicate all the necessary dimensions, taking standard tolerances into account. These dimensions are indicative. The exact dimensions can only be taken from the finished product.*